Emaux

E-Turbo Single Speed Pump

HIGH PREFORMANCE & HEAVY DUTY

For residential pools and Spas

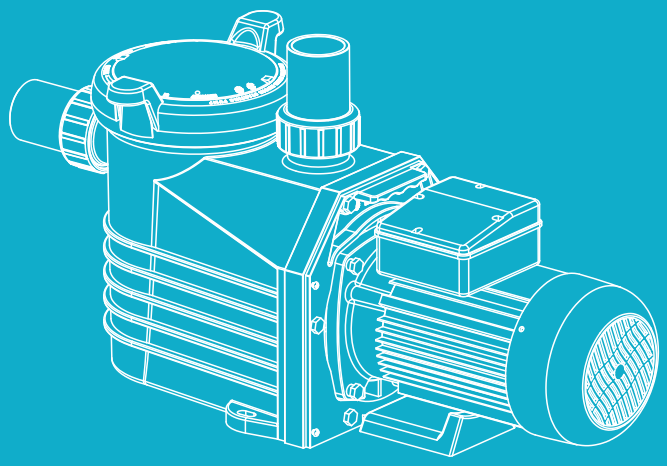

USER MANUAL

E-TURBO PUMP

CE RoHS COMPLIANT 2002/95/EC SAA

Model: ET Series

EMPU24053101

E-TURBO PUMP

FOR RESIDENTIAL POOLS AND SPAS

TABLE OF **CONTENT**

PAGE

2 .... WARNINGS AND SAFETY INSTRUCTIONS

4 .... 1. ET SERIES PUMP OVERVIEW

4 .... 2. PRODUCT INFORMATION

5 .... 3. IMPORTANT SAFETY INSTRUCTIONS

5 .... 4. INSTALLATION
- 4.1 PIPING
- 4.2 ELECTRICAL WIRING

7 .... 5. START UP

8 .... 6. ROUTINE MAINTENANCE

8 .... 7. WINTERIZING

9 .... 8. REPLACEMENT PARTS

10 .... 9. TROUBLE SHOOTING

10 .... 10. TERMS OF THE WARRANTY

WARNINGS AND SAFETY INSTRUCTIONS
GENERAL WARNING

This instruction contain general caution information for use in Pool and SPA pump installation application. Specified Pump model function should be refer to particular manual. Components such as the filtration system, pumps and heater must be positioned so as to prevent their being used as means of access to the pool by young children.

RISK OF ELECTRICAL SHOCK

This appliance should be installed by qualified electrical personnel in accordance with National Electrical Code and all applicable local codes and ordinances. Hazardous voltage can shock, burn, and cause death or serious property damage. DO NOT use an extension cord to connect unit to electric supply to reduce the risk of electric shock.

1 The pump should be permanently connected to an individual circuit breaker.

2 Pump must be connected to a residual current device (RCD) having a rated residual operating curren Not exceeding 30 mA or receptacle with ground fault circuit interrupt (GCFI).

3 . Electrical grounding must be connected before connecting to electrical power. Failure to ground all electrical equipment can cause serious or fatal electrical shock hazard.

4 Bonding: Use at least #8 AWG (#6 AWG for Canada) a solid copper conductor, run a continuous wire from external bonding lug (if available) to the pressure wire connector provided on the electrical equipment and to all metal parts of swimming pool, spa, or hot tub, and metal piping (except gas piping), and conduit within 1.5 m (5 ft) of inside walls of swimming pool, spa, or hot tub.

5 Never open the inside of the drive motor enclosure. There is a capacitor bank that holds a mains supply voltage charge even when there is no power to the unit. The voltage should be referred to the individual pump operation voltage.

6 The pump is capable of high flow rates; use caution when installing and programming to limit pumps performance only.

7 Switch OFF pump power before servicing and disconnecting the main circuit to the pump.

8 Never change the filter control valve position while the pump is running.

COMPRESS AIR HAZARDOUS

This system enclosed pre-filter / filter and become pressurized. Pressurized air can cause the Lid to separate which can result in serious injury or death.

STAND CLEAR OF PUMP DURING START-UP

Pool and spa circulation systems operate under high pressure. When any part of the circulating system (i.e. lock ring, pump, filter, valves, etc.) is serviced, air can enter the system and become pressurized. Filter tank Lid and pre-filter cover must be properly secured to prevent violent separation. Place pre-filter / filter air relief valve in the open position and wait for all pressure in the system to be relieved before remove the lib to access the basket for cleaning.

HYPERTHERMIA

SPA water temperature excess 38°C (104°F) may be injurious to health. Measure water temperature before entering SPA. Hyperthermia occurs when the internal temperature of the body reaches a level several degrees above the normal body temperature of 98.6 °F (37 °C). The symptoms of hyperthermia include drowsiness, lethargy, and an increase in the internal temperature of the body.

SUCTION ENTRAPMENT HAZARD

This pump produces high levels of suction and creates a strong vacuum at the main drain at the bottom of your pool and spa. This suction is so strong that it can trap adults or children under water if they come in close proximity to a pool or spa drain or a loose or broken drain cover or grate. The Virginia Graeme Baker (VGB) Pool and Spa Safety Act creates new requirements for owners and operators of commercial swimming Pools and spas.

Commercial pools or spas constructed on or after December 19, 2008, shall utilize:

1 . A multiple main drain system without isolation capability with suction outlet covers that meet ASME/ANS A112.19.8a Suction Fittings for Use in Swimming Pools, Wading Pools, Spas, and Hot Tubs and either:

1.1 A safety vacuum release system (SVRS) meeting ASME/ANSI A112.19.17 Manufactured Safety Vacuum Release systems (SVRS) For Residential and Commercial Swimming Pool, Spa, Hot Tub, and Wading Pool Suction Systems and/or ASTM F2387 Standard Specification for Manufactured Safety Vacuum Release Systems (SVRS) for Swimming pools, Spas and Hot Tubs or

1.2 A properly designed and tested suction-limiting vent system or

1.3 An automatic pump shut-off system.

Commercial pools and spas constructed prior to December 19, 2008, with a single submerged suction outlet shall use a suction outlet cover that meets ASME/ANSI A112.19.8a and either: 1 . A SVRS meeting ASME/ANSI A112.19.17 and/or ASTM F2387, or 2 . A properly designed and tested suction-limiting vent system, or 3 . An automatic pump shut-off system, or 4 . Disabled submerged outlets, or 5 . Suction outlets shall be reconfigured into return inlets.

There are five types of suction entrapment according to The Virginia Graeme Baker (VGB) Pool and Spa Safety Act 1 Body Entrapment a section of the torso becomes entrapped 2 Limb Entrapment an arm or leg is caught by or pulled into an open drainpipe 3 Hair Entrapment or entanglement hair is pulled into and/or wrapped around the grate of the drain cover 4 Mechanical Entrapment the bather's jewelry or clothing gets caught in the drain or the grate 5 Evisceration the victim's buttocks come into contact with the pool suction outlet and he or she is disemboweled.

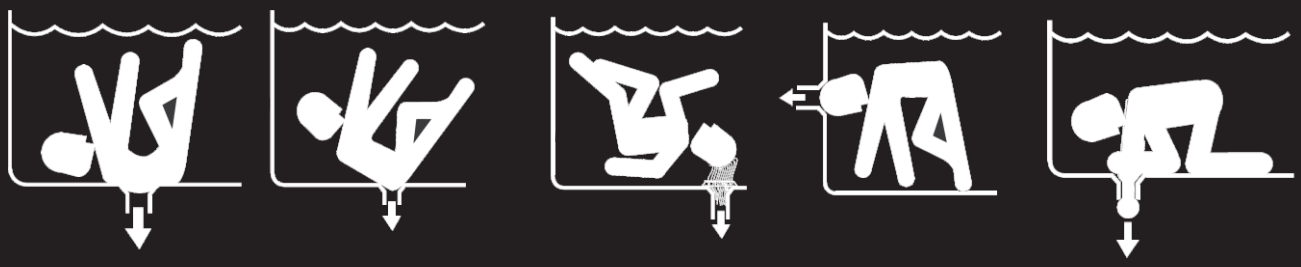

TO REDUCE ENTRAPMENT HAZARD RISK

WARNING:

Two function suctions outlets per pump must be installed to prevent entrapment. The minimum separate of suction on the same plate must be at least point to point measurement 1 meter (3ft) apart. It is used to avoid “dual blockage” by bather. If suction is found damage, broken, cracked, missing or not securely attached during regular checking, shunt down the pool and replace it immediately.

A vacuum release or vent system is recommended to install for suction entrapment release.

1. ET SERIES PUMP OVERVIEW

Emaux new E-Turbo single-speed pump combination of new pump body design and Emaux high performance motor, offer a more efficient and reliable solution for pool and spa. Noise reduction design and optimize water flow that delivering optimal performance. Emaux E-Turbo single-speed pump is designed for easy and hassle-free installation. This ensures a smooth and efficient installation process, saving time and effort. New design base to make the pump suitable for retrofitting into existing pool systems, providing an upgrade option for pool owners.

2. PRODUCT INFORMATION

Model 50Hz	Input (kW)	Current (AMP)	Noise (dB)	Head(m)					
				6	8	10	12	14	16
				Flow Rate(m^3/h)					
ET075	0.75	3.5	63	16	14.4	12.4	9.5	5.5	–
ET100	1.10	5	64	20.2	19..8	16.8	14.8	12	8.5
ET150	1.50	6.8	65	24.5	23.2	21.5	19.2	16.5	12.5
ET200	1.80	8.2	65	28	26.6	25	22.5	20	16.5
ET300	2.20	10	67	31.2	29.8	28	25.8	23.2	20

Code 230V/50Hz	Code 230V/60Hz	Model	Connection Size	Horsepower	Weight (kg)	Input Power (kW)	Capacitance 220V	A (mm)
9022401	9022406	ET075	1.5"(50mm)ID / 2"(63mm)OD	0.75hp	14.5	0.75	20μF	652
9022402	9022407	ET100	1.5"(50mm)ID / 2"(63mm)OD	1.0hp	14.5	1.1	25μF	652
9022403	9022408	ET150	1.5"(50mm)ID / 2"(63mm)OD	1.5hp	15	1.5	25μF	652
9022404	9022409	ET200	1.5"(50mm)ID / 2"(63mm)OD	2.0hp	15.2	1.8	30μF	652
9022405	9022410	ET300	1.5"(50mm)ID / 2"(63mm)OD	3.0hp	15.7	2.2	35μF	682

• DIMENSIONS

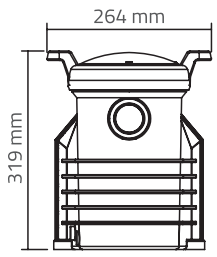

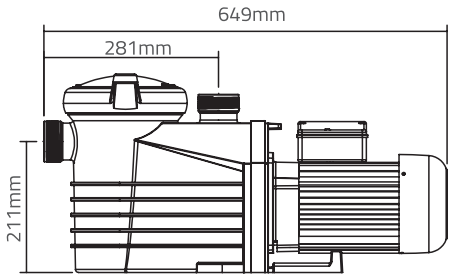

• PERFORMANCE DATA

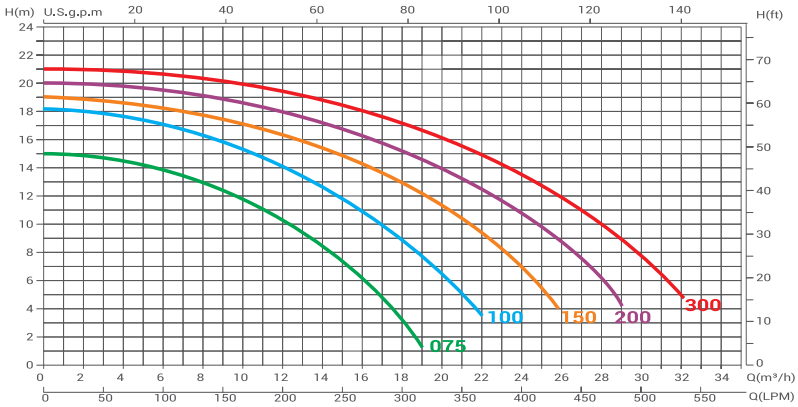

Remark: The performance curve above is for 50Hz models

3. IMPORTANT SAFETY INSTRUCTIONS

WARNING: IMPORTANT: The instruction manual you are holding includes essential information on the safety measures for installation and start-up of this equipment. Therefore, the installer as well as the user must read the instructions before beginning installation and start-up. Keep this manual for future reference.

1. A protective device is to be installed in the fixed wiring.
2. This appliance cannot be used by children (8 years or below). Children shall not play with the appliance. Cleaning and user maintenance shall not be made by children without supervision.
3. This appliance cannot be used by persons with reduced physical, sensory or mental capabilities, or lack of experience and knowledge, unless they have been given supervision or instruction concerning the use of the appliance by a person responsible for their safety.
4. The appliance shall be installed in accordance with national wiring regulations and a means of disconnection must be incorporated in the fixed wiring in accordance with the wiring rules. A disconnected system must be incorporated in the fixed.
5. The pump is to be supplied through a residual current device (RCD) or Ground Fault Circuit Interrupt (GFCI) having a rated residual operation current not exceeding 30mA.

	Correct disposal of this product
	This symbol on the product, or in its packaging, indicates that this product may not be treated as household waste. Instead, it should be taken to the appropriate waste collection point for the recycling of electrical and electronic equipment. By ensuring this product is disposed of correctly, you will help prevent potential negative consequences for the environment and human health, which could otherwise be caused by the inappropriate waste handling of this product. For more detailed information about the recycling of this product, please contact your local council, your household waste disposal service, or the shop where you purchased the product.

4. INSTALLATION

4.1 PIPING

1. Install the pump as close to the pool as possible, preferably in a dry, well ventilated area away from direct sunlight. Protect the pump from excessive moisture.
2. Place the pump as close to the water source as possible, so that the suction pipe is short, straight and direct to reduce the friction loss. Don't install the pump at more than 10ft (3 meters) of geometrical height from water level. Pump priming time for 3m (10ft) should be at least 7 minutes at 2900 RPM.

3. Before installing the pump, make sure that the surface is solid, elevated, rigid and vibration free.
4. Secure the pump to the base with screws or bolts to limit the vibration and the stress on the pipe or the joints.
5. Leave enough space for gate valves in suction and discharge piping, if required.
6. Connect the suction and discharge pipe to the outlet and inlet of the swimming pool.
7. Make sure that floor drainage is adequate to prevent flooding.
8. Make sure that the pump and piping are accessible for servicing.

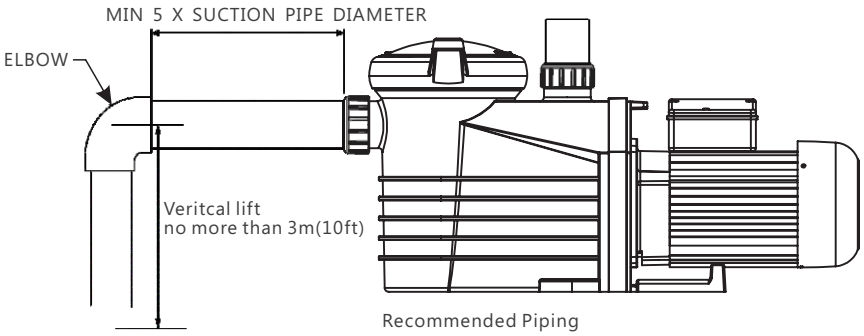

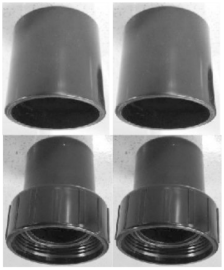

Note:
The pump suction and discharge connections have thread stops, DO NOT try to screw the pipe beyond these stops. The two sets 2" union adaptor are universal design for metric and imperial PVC pipe connection.

4.2 ELECTRICAL WIRING

WARNING:
This power pump requires a certified electrician or qualified poor installer to ensure there is adequate protection between the pump motor and mains power supply according to individual country's safely code.
1. The pump has to connect to circuit breaker to isolate the motor from the mains power for overload protection. The circuit breaker rating should comply with the electrical specification of the pump's working voltage and power.
2. The power has to be with a Residual Current Device (RCD) or Ground Fault Circuit Interrupt (GFCI) having a rated residual operating current not exceeding 30mA.

WARNING:

・If the RCD/GFCI device trips, it means there is fault on the power line or motor. Do not use this pump. Disconnect the pump and have the problem corrected by a qualified service representative before using. Press the reset button to reset the RDC/GFCI devices after fixing. If the power line problem is not fixed it will keep the circuit shut off and will not reset.
・It is recommended to test the RCD/GFCI at least once a month.

RCD

NEMA GFCI Receptacle

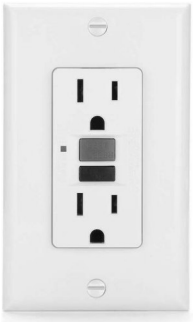

NEMA GFCI Breaker

Pumps should be shipped with Power cord with plug for corresponding countries. If there is not power cord attached to the pump, it is necessary to follow the local electricity power line color code to connect the power according to the wiring for individual pump diagram.

Australia Plug UK Plug European Plug 200-240Vac Single Phase	NEMA Plug 115Vac Single Phase	NEMA 230Vac 3 phase Wire Color Code
L N Ground Green / Yellow or Green	L Black N White or Silver Green / Yellow or Green	L1 = Black L2 = Red L3 = Blue White Green / Yellow or Green

• Wiring Diagram , 220Vac 50 & 60Hz

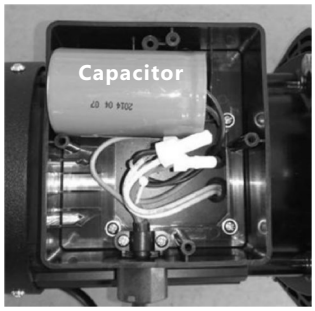

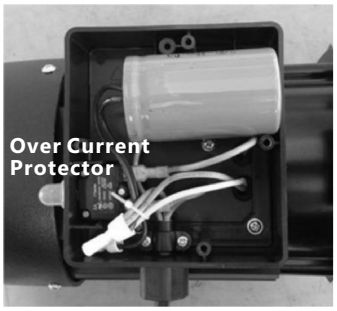

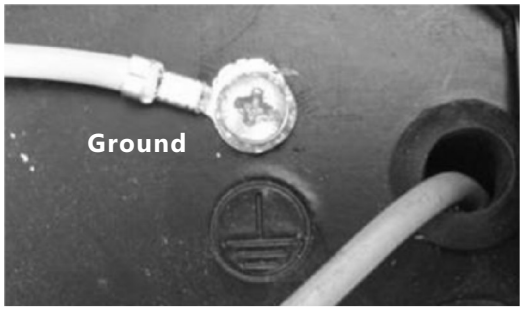

5. START UP

WARNING:

1. Verify the pump shaft turn freely.
2. Check that the mains voltage, current and frequency correspond with the name plate.
3. Never let the pump run dry! Running a pump dry may cause damage the mechanical seal causing leakage and flooding.
4. Fill the pre-filter with water before starting the motor.
5. Before removing the pre-filter lid, STOP PUMP, CLOSE GATE VALVES in suction and discharge pipes.
6. Always STOP THE PUMP before when RELEASING ALL PRESSURE from the pump and the piping system.
7. Never tighten or loosen screw while the pump is in operation.
8. The suction pipe and the suction inlet in the pool must be free from obstruction.

WARNING: Tighten/untighten the pump Lid by hand only.

Before start-up, check the alignment of the pump. The pipes should be inspected to ensure that they are properly fitted and tightened and that they do not exert pressure or tension on the pump's suction or discharge connection.

1. Clear all piping of construction debris and verify that the piping has passed a proper pressure test.
2. Check the filter and other equipment for proper installation, verifying all clamps and connections are properly installed as per the manufacturer's instructions.
3. Open any shut off valves on the suction and discharge lines.
4. Open the filter pressure relief valve and release all pressure from the system.
5. If the pump is located below the water level of the pool, opening the pressure relief valve will fill the pump with water.
6. If the pump is located above the pool water level, remove the Lid from the pre-filter and fill with water before starting the pump.
7. Check to see that the Lid O-ring and seat areas are clean and lubricated. Debris in the sealing area can cause air to leak into the system and make it difficult to prime the pump.
8. Close/tighten the Lid to make an airtight seal.
9. Turn on power wait for pump to prime. Pump priming time for 3m (10ft) should be at least 7 minutes. Priming will depend on vertical length of suction lift and horizontal length of suction pipe. If the pump does not prime within priming time, stop the motor and determine cause.
10. If the pump does not prime within 10 minutes. Ensure all instructions to this point have been followed. Stop the pump! Check for suction leaks and repeat steps (I) through (VIII).

6. ROUTINE MAINTENANCE

The pump mechanical seal requires no lubrication and service.
The only routine maintenance needed is the inspection and cleaning of the pre-filter basket. Debris or trash collected in the basket will choke off the water flow through the pump. Follow the instructions below in order to clean the pre-filter basket:
1. Turn off the pump, close the gate valve in suction and discharge, and release all pressure from the system before proceeding.
2. Lose the suction inlet hose or piping.
3. Turn the ring-lock by hand to open it and release the transparent Lid.
4. Remove the pre-filter basket and clean. Make sure all the holes in the basket are clear, flush the basket with water. Put back the basket with the guideline on the edge of the basket. If the basket is not placed correctly, the transparent lid and its ring-lock will not fit well and will cause air leakage.
5. Clean and inspect the lid O-ring ring and replace it if it is damaged. Reinstall it on the transparent lid.
6. Clean the ring groove on the pre-filter body and replace the Lid. To help keep the Lid from sticking, tighten it by hand only.
7. Connect back the suction hose or pipe. Water should flood the pump body and restart the pump.
8. Restart the pump and check that it is priming correctly.

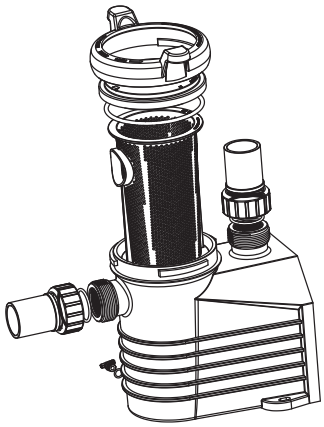

7. WINTERIZING

If the air temperature drops below 0°C (35°F), the water in the system can freeze and cause damage. Damage due to freezing is not covered by warranty.
Prevention of damage from freezing:
1. Shut off electrical power for the pump at the house circuit breaker.
2. Drain the water out of the pump case by removing the two drain plugs from the case.
3. Store the plugs in the pump basket.
4. Cover the motor to protect it from severe rain, snow and ice.
5. If it is possible, store the pump in a dry location during this time.
6. Do not wrap the motor in plastic. It will cause condensation and rust on the inside of the motor.

8. REPLACEMENT PARTS

- **Parts of ET Series Pump Models: ET075/ET100/ ET150/ET200/ ET300**

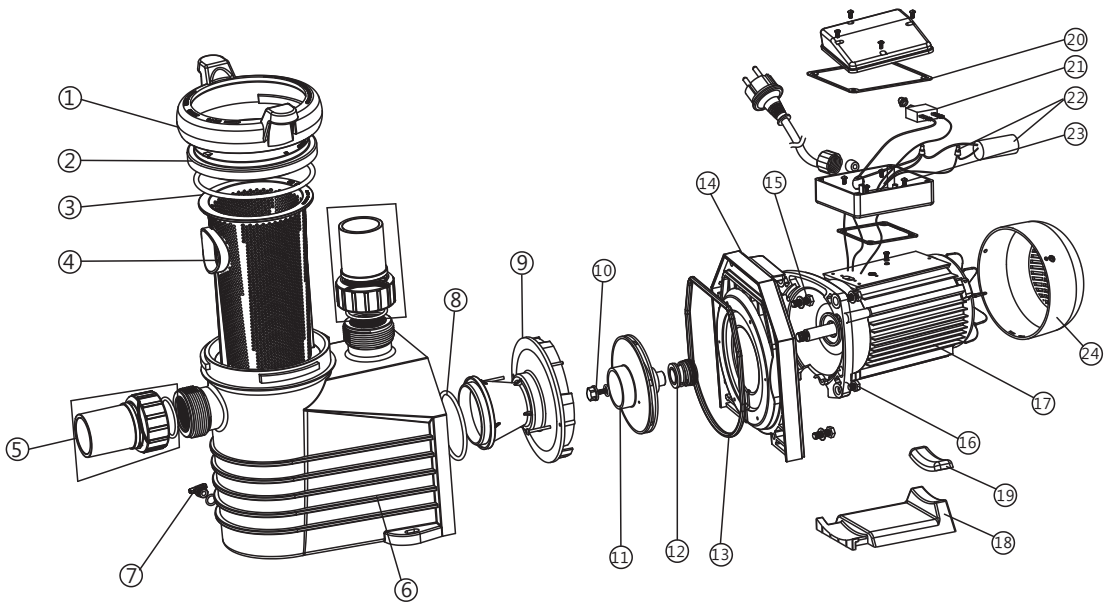

Key No.	Part No.	Description	QTY
1	4204010050	Nut For Lid	1
2	4203810050	Transparent Lid	1
3	111010057	O-Ring For Lid	1
4	4202310050	Basket	1
5	E023801	1.5"Union	2
6	4200510050	Pump body	1
7	89021307	Drain Plug With O-ring	2
8	111002592	O-Ring For Diffuser	1
9	420219954	Diffuser	1
10	89020719	Screw for impeller with O-ring	1
11	420360894	Impeller For 075 (50Hz)	1
11	420360822	Impeller For 100 (50Hz)	1
11	420360887	Impeller For 150 (50Hz)	1
11	420360823	Impeller For 200 (50Hz)	1
11	420360824	Impeller For 300 (50Hz)	1
11	420360899	Impeller For 075 (60Hz)	1
11	420360894	Impeller For 100 (60Hz)	1
11	420360896	Impeller For 150 (60Hz)	1
11	420360822	Impeller For 200 (60Hz)	1
11	420360887	Impeller For 300 (60Hz)	1
12	E020001	3/4"Mechanical seal	1
13	111990019	O-Ring for Flange	1
14	4202010050	Flange	1
15	112000069	M8*35 Screw	6
16	112000065	M8*25 Screw	4
17	04020116	Motor YYD-8022E For 075 220V 50Hz/60Hz	1
17	04020117	Motor YYD-8032E For 100 220V 50Hz/60Hz	1

Key No.	Part No.	Description	QTY
17	04020118	Motor YYD-8042E For 150 220V 50Hz/60Hz	1
17	04020119	Motor YYD-8052E For 200 220V 50Hz	1
17	04020120	Motor YYD-8062E For 300 220V 50Hz	1
17	04021123	Motor YYD-8052EE For 200 220V 60Hz	1
17	04021124	Motor YYD-8062EE For 300 220V 60Hz	1
18	4201210050	Base	1
19	111990020	Arch Cushion for Base	1
20	02011073	Arch Cushion For Cable Box	1
21	04015015	Overload Switch PE77-8A/250VAC for 150	1
21	04015012	Overload Switch PE77-10A/250VAC for 200	1
21	04016037	Overload Switch PE77-13A/250VAC for 300	1
22	04016012	Capacitor for SS/SD/SQ/SP/ST100-120 & SC075 & SPH/ET075Pump	1
22	04016014	Capacitor for SB/SR10,SB15 & SC100-150 & SPH/ET100-150 Pump	1
22	04016015	Capacitor for SB/SR20 & SC/EPH200 & SPH/ET200 Pump	1
22	04016016	Capacitor for SB/SR30 EPH300,EPH400 & SPH/ET300 Pump	1
23	89022112	Cable Box	1
24	01321031	Fan Cover	1

9. TROUBLE SHOOTING

Problem description	Possible causes
Motor does not start	1. Disconnect switch or circuit breaker in off position 2. Fuses blow nor thermal over load open 3. Locked motor shaft 4. Motor windings burned out 5. Defective starting switch inside single phase motor 6. Disconnected or defective wiring 7. Low voltage
Pump does not reach full speed	1. Low voltage 2. Pump connected to the wrong voltage
Motor over heats (protect or trips)	1. Low voltage 2. Motor windings connected to the wrong voltage on dual voltage model
Pump delivers no water	1. Pump is not primed 2. Closed valve in suction or discharge line 3. Leakage or air into suction system 4. Impeller clogged
Leakage of water at the shaft	Shaft seal requires replacement
Low pump capacity	1. Valve in the suction or discharge line partly closed 2. Suction or discharge line partly plugged 3. Suction or discharge line too small 4. Plugged basket in skimmer or hair and lint strainer 5. Dirty filter 6. Impeller clogged
High pump pressure	1. Discharge vale or inlet fittings closed too much 2. Return lines too small 3. Dirty filters
Noisy pump and motor	1. Plugged basket in skinner or hair in lint strainer 2. Worn motor bearings 3. Valve in suction line partly closed 4. Suction line partly plugged 5. Vacuum hose plugged or too small 6. Pump not supported properly
Air bubbles at inlet fittings	1. Leakage of air into the suction line in connections or valve stem 2. Cover gasket of hair and lint strainer needs cleaning 3. Low water level in the pool

Note: If the above recommendations of this manual do not solve your particular problem(s), please contact your local service agent for further assistance

10. TERMS OF THE WARRANTY

As original purchaser of this equipment have purchased from Emaux Water Technology Co Ltd, through Authorized International Distributor or Dealer, warrants its products free from defects in materials and workmanship under normal use during warranty period. The warranty period begins on the day of purchase and extends only to the original purchaser. It is not transferable to anyone who subsequently purchases the product from you. It excludes all expendable parts.

During the warranty period, Emaux authorized reseller will repair or replace defective parts with new parts or, at the option of Emaux, serviceable used parts that are equivalent or superior to new parts in performance.

This Limited Warranty extends only to products purchased from Emaux authorized reseller. Does not extend to any product that has been damaged or rendered defective.

(a) as a result of accident, misuse or abuse;
(b) as a result of natural disaster;
(c) by operation outside the usage parameters stated herein;
(d) by the use of parts not manufactured or sold by Emaux;
(e) by modification of the product;
(f) as a result of war or terrorist attack; or
(g) as a result of service by anyone other than Emaux authorized reseller or authorized agent.

EXCEPT AS EXPRESSLY NO OTHER WARRANTIES EXPRESSED OR IMPLIED, INCLUDING ANY IMPLIED WARRANTIES OR MERCHANTABILITY AND FITNESS FOR A PARTICULAR PURPOSE. EMAUX EXPRESSLY DISCLAIMS ALL WARRANTIES NOT STATED IN THIS LIMITED WARRANTY. ANY IMPLIED WARRANTIES THAT MAY BE IMPOSED BY LAW ARE LIMITED TO THE TERMS OF THIS EXPRESS LIMITED WARRANTY.

EMAUX WATER TECHNOLOGY CO., LTD
ADDRESS FLAT A-D, 20/F., KAI BO 22, 22 WING KIN ROAD,
KWAI CHUNG, HONG KONG
PHONE +852 2832 9880

YOUR PREMIER SUPPLIER

www.emauxgroup.com