Emaux

Nano Tech UV-C
DISINFECTION SYSTEM

A NON-CHEMICAL APPRORACH TO WATER SANITIZATION
For above-ground and residential pools water disinfection

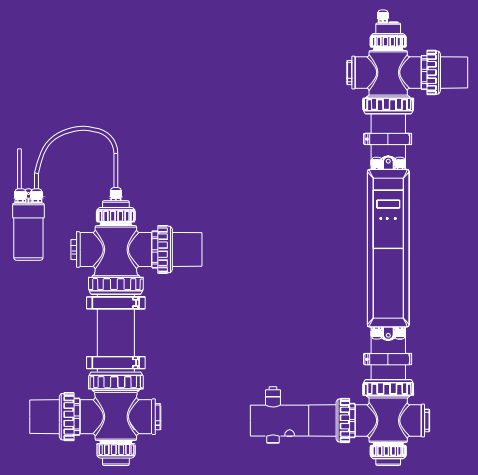

USER MANUAL

Model: NT-UV Series

25100990

TABLE OF **CONTENT**

PAGE

❷ ....1. SAFETY WARNINGS
❸ ....2. INTRODUCTION
2.1. HOW ULTRAVIOLET DISINFECTION WORK?
2.2. HOW OZONE DISINFECTION WORK?
❹ ....3. MAIN ADVANTAGES
❺ ....4. TECHNICAL SPECIFICATIONS
4.1 WATER CHEMISTRY
4.2 DIMENSIONS
❻ ....5. INSTALLATION
5.1 PLUMBING INSTALLATION
5.2 TYPICAL INSTALLATION
5.3 INSTALLATION OPTIONS
5.4 NT-UV130F AND NT-UV130-TF WITH FLOW SWITCH INSTALLATION
5.5 NANO-TECH UV-C OZONE SYSTEM
⓫ ....6. START UP
⓫ ....7. OPERATION
7.1 DIGITAL TIMER*
7.2 UV LAMP LIFETIME METER
7.3 CLOCK SETTING
7.4 SCHEDULE TIMER SETTING
7.5 FLOW SWITCH*
⓭ ....8. MAINTENANCE
⓮ ....9. START UP
⓯ ....10. LAMP AND QUARTZ GLASS MAINTENANCE AND REPLACEMENT
⓯ ....11. ELECTRICAL UNIT REPLACEMENT
11.1 ELECTRICAL WIRING
11.2 CONTROLLER PCB
11.3 BALLAST CONNECTION
11.4 GROUNDING
11.5 LAMP SOCKET
⓳ ....12. TROUBLE SHOOTING
⓴ ....13. SPARE PART LIST
㉕ ....14. TERMS OF THE WARRANTY

Nano Tech

NANO TECH UV-C

This installation and operation include important guide to installer and users. It must be installed and serviced by qualified Pool and SPA technician in accordance with corresponding electrical and piping code. It is recommend to have owner and operator to keep this manual for further reference.

1. SAFETY WARNINGS

WARNING:

IMPORTANT: The instruction manual you are holding includes essential information on the safety measures to be implemented for installation and start-up of this appliance. Therefore, the installer as well as the user must read the instructions before beginning installation and start-up. Keep this manual for future reference.

This device is intended for swimming pool sand spas only; do not use it for potable water sanitation (drinking water).

The system must be connected only to a supply circuit that is protected by a Ground Fault Circuit Interrupter (GFCI), otherwise could result in electrical shock causing serious bodily injuries, including death.

The following safety instructions have to be taken into consideration when installing or using this ultraviolet disinfection system:

1. Disconnect all power supplies during installation.
2. Do not operate the ultraviolet system if the power supply lead is damaged.
3. Replace damaged cords immediately.
4. To avoid possible electrical shock, special care should be taken keeping all connections dry and off the ground. Do not touch the plug with wet hands.
5. For each of the following situations, do not attempt to repair the appliance on your own; return it to an auth rized service facility for revision:
   5.1 If the appliance falls into the water, DO NOT reach for it! First unplug it and then retrieve it. If electric components of the appliance get wet, unplug the appliance immediately.
6. Do not operate this UV-C system if the cord or plug is damaged, if it is not operating properly after a fall or other wise caused damage.
7. Never look at the UV lamp directly while it is operating, as it may cause eye injury, burns, or even blindness.
8. Lamps and quartz sleeves are extremely delicate. Care should be taken when handling or replacing these components:
   8.1 Wear cotton gloves when handling lamps or sleeves.
   8.2 Hold bulbs by the ends only and never touch the glass with bare hands, since it would leave dirt which would reduceit working life.
   8.3 If any fingerprint is left, clean it with alcohol.
9. Allow the ultraviolet lamps to cool before handling.
10. Make sure that the nut, the washer and the O-Ring are correctly positioned, otherwise the quartz sleeves could be expelled from their holder at speed and injure you.
11. Special safety warning must be taken into conside ration for the model Nano-Tech UV-C Ozone NT-UV87-TO:
    11.1 The UV lamp generates ozone that emits a strong odour, even in very small quantities, and can be harmful for eyes, nose and skin.
12. Check the system for any leakage. A proper installation and the correct position of the sealing rings are of crucial importance.

2. INTRODUCTION

Ozone and UV-C are the two most efficient disinfection processes in water treatment. By mixing these two concepts in one unique equipment you will keep your swimming pool water always fresh, crystal clear and to tally disinfected, reducing the use of chlorine to a minimum.

2.1 HOW ULTRAVIOLET DISINFECTION WORK

Ultraviolet technology is a non-chemical approach to disinfection. In this method of disinfection, nothing is added which makes this process simple, inexpensive and requires very low maintenance. UV-C light is becoming increasingly favored by the pool industry as its ability to break down and remove chloramines, which will cause eye, skin and nose irritation, and breathing difficulties.
UV-C light at a particular wavelength 253.7nm is a very powerful germicide. It deactivates the DNA of bacteria, viruses and other pathogens and thus destroys their ability to multiply and cause disease.

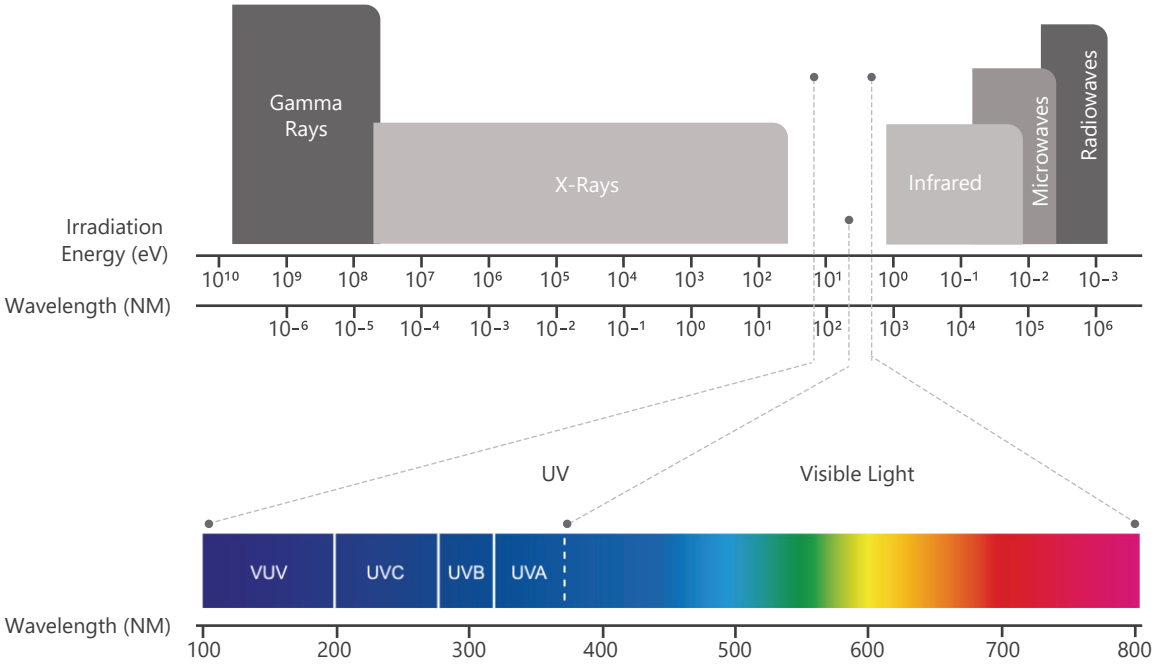

UV dose of 30mJ/cm² is sufficient for disinfection of the water and protection against 99.9% chlorine-resistant micro organisms.

2.2 HOW OZONE DISINFECTION WORK

Emaux has developed a special model which combines the ozone and UV-C technology in one unique equipment (see technical specifications for NT-UV87-TO).
Nano-Tech UV-C & Ozone (NT-UV87-TO model) contains a high intensity Ultraviolet lamp different from the other UV models. This special lamp emits two separates wavelengths within the UV spectrum: 254nm and 185nm. While the 254nm wave deactivates the DNA of bacteria, viruses and other pathogens, the 185 nm wave is responsible for converting the oxygen contained in the quartz sleeve area into ozone.

The ozone produced is introduced into the water stream by Venturi effect.
Finally, the Ozone and the ultraviolet radiation will work together to destroy micro-organism such as moulds, Legionella bacteria, parasites, algae or viruses, and also breaks down urine, transpiration, cosmetics and sun cream particles without leaving any by-products (Figure 1).

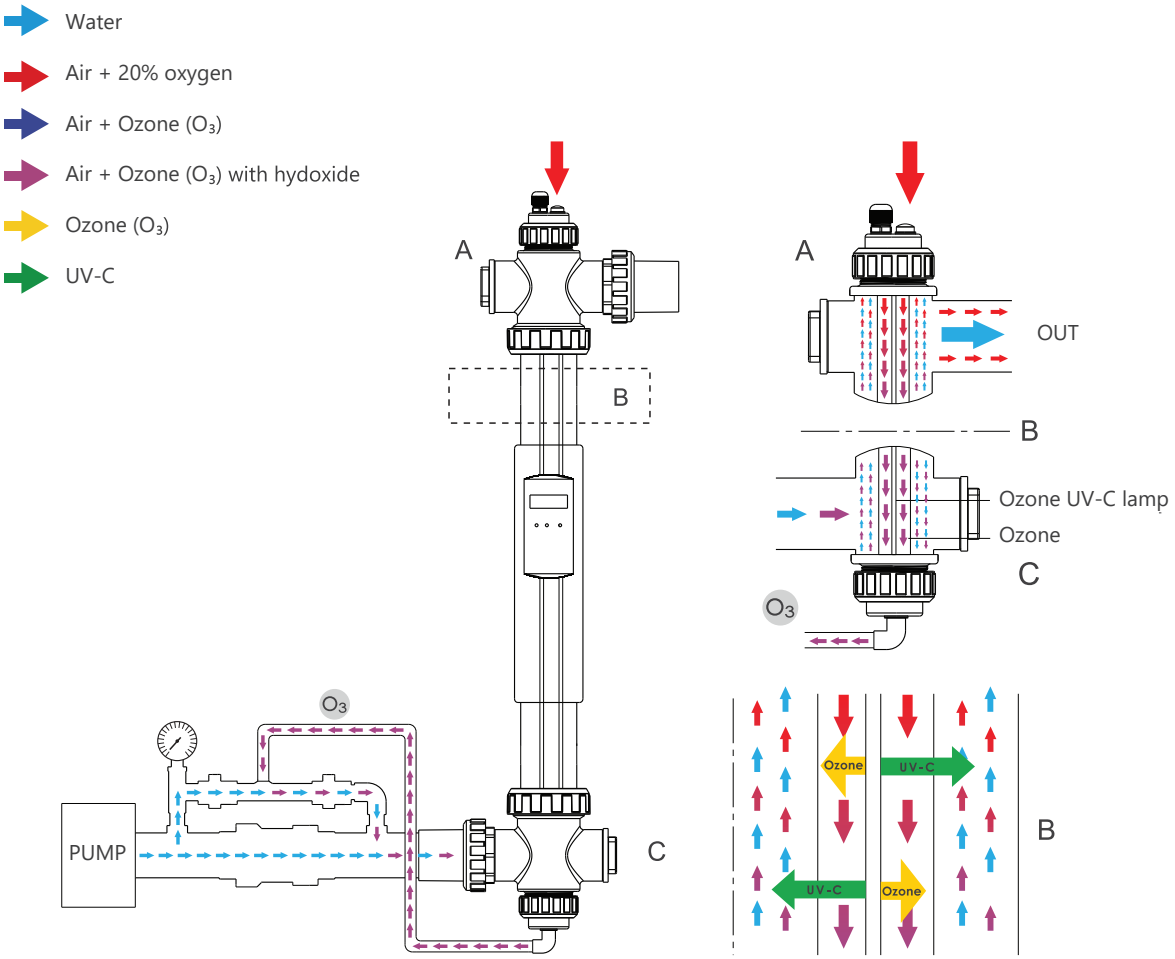

Figure 1

3. MAIN ADVANTAGES

Ultraviolet advantages

1. Protects your pool against pathogenic organism and algae
2. Environmentally friendly
3. No risk of allergies
4. Non-irritating to skin
5. Corrosion and Odour-free
6. Reduces chlorine consumption up to 85%
7. low pressure UV-C lamp life of 9000 hours(NT-UV16~75T) , Amalgam lamp life of 12000 hours(NT-UV130-F/TF)
8. The device indicates when the lamp must be replaced (only models with timer)
9. Housing with mirror polished Stainless Steel AISI-316L that increases the UV-C radiation reflection, there by increasing the efficiency up to 35%
10. Easy installation and maintenance

Ozone advantages (only NT-UV87-TO)

1. Protects your pool against pathogenic organism and algae
2. Environmentally friendly
3. No risk of allergies
4. Non-irritating to skin
5. Corrosion and Odour-free
6. Reduce chlorine consumption up to 90%
7. Ozone UV-C lamp life of 12000 hours
8. The device indicates when the lamp must be replaced
9. Urine, sun cream, cosmetics and transpiration particles are broken down by Ozone
10. Low maintenance
11. Cost-saving

4. TECHNICAL SPECIFICATIONS

Model	Main Feature	Max. flow Rate(m^3/h)	Input Power (W)	Type Of Uv Lamp
NT-UV16	UV	7	16	TUV 16W 4P SE
NT-UV40	UV	20	40	TUV 36T5 HE 4P SE
NT-UV40-T	UV with timer			
NT-UV75	UV	25	75	TUV 36T5 HO 4P SE
NT-UV75-T	UV with timer			
NT-UV87-TO	UV and Ozone with timer	25	87	GHO36T5VH
NT-UV130-F	UV with flow switch	30	130	TUV 130W XPT SE (AmalgamUV-C lamp)
NT-UV130-TF	UV with timer and flow switch			

4.1 WATER CHEMISTRY

	NT-UV87-TO	NT-UV130F / -TF	Other Models
Power supply	220-240V, 50 / 60Hz	220-240V, 50 / 60Hz	90-270V, 50 / 60Hz
Maximum working pressure	3 bar	3 bar	3 bar
Connection size	1½''/ 2''	1½''/ 2''	1½''/ 2''
Performance at recommended flow rate	30 mJ/cm²	30 mJ/cm²	30 mJ/cm²
Low pressure UV-C lamp lifetime	N/A	N/A	9000 hours
Amalgam lamp lifetime	N/A	12000 hours	N/A
Ozone UV-C lamp lifetime	12000 hours	N/A	N/A
IP Protection	IP 54	IP 54	IP 54
Maximum Ozone production	0.6 gram	N/A	N/A

4.2 DIMENSIONS

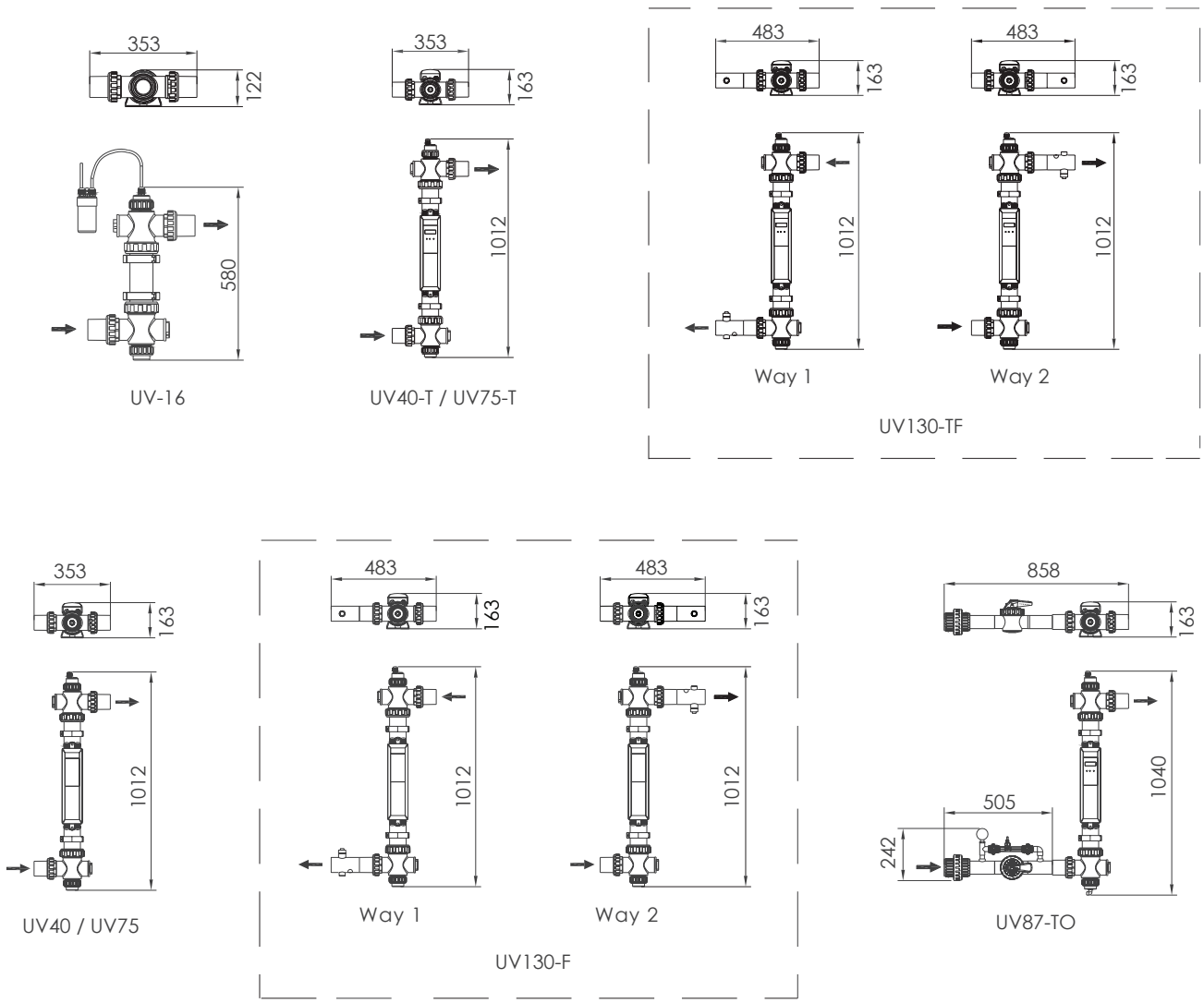

5. INSTALLATION

Install the unit taking into consideration the access and space for servicing, and in a position where the lamp can be taken out easily. It is important to choose your disinfection system according to the flow rate required for the installation. If water passes through the unit too fast, the exposure time required for its maximum efficiency will be not enough. For this reason, the ultraviolet equipment selected for your pool should correspond to the maximum flow rate of your filtration system (pumps).
We also recommend to install the unit in a by-pass.

5.1 PLUMBING INSTALLATION

WARNING:

It is recommended to use the same power source for UV-C system and the filtration pump such that they can be power ON / OFF simultaneously to prevent no water flow for UV-C lamp cooling inside the stainless steel cylinder.
This UV-C disinfection system comes with all internal components assembled and it is ready to be installed. Only pipes connections should be made before starting up the equipment.

To achieve the correct installation, please follow the recommendations listed below:

1. Never install the UV-C system in an area exposed to full sunlight. This equipment must be in stalled in a dry and ventilated area.
2. The UV-C system must be fitted in a vertical position, and leaving a minimum space of 30cm und neathand 1.5meters at the top of the equipment for servicing and replacing the lamp.
3. The UV-C system will need to be plumbed into the swimming pool / spa / water feature circuit, always after the filter and before pH regulator or salt electrolysis system (if any).
4. If the filtration pump exceeds the maximum flow rate allowed for the UV-C system, a by-pass circuit will be required.
5. Fit the UV-C system with the supplied clamps in a fixed position and hand-tighten the 3 part couplings. Neve use a wrench, tongs or other tools to tighten synthetic parts.
6. Make the UV-C connections 1½"or 2" to the circuit pipes.
7. Activate the pump and check that there is not any leakage in the circuit.

5.2 TYPICAL INSTALLATION

This water circulation system flow from water pump from swimming pool skimmer to sand filter and position the Nano Tech UV-C lamp or ozone disinfection unit after filter and before chlorinator.
Water pH or ORP probe should be mount in front of the Ozone generator and chemical dosing, such as acid or chlorine, after the ozone UV-C unit.

WARNING: For UV-C and Chlorinator put together as disinfection system, the UV-C should be place before Chlorinator.
Nano Tech, UVC products are not recommended to be used in seawater or seawater-like environments with high salt content, as the stainless steel body will be corroded and leaked in long term operation.

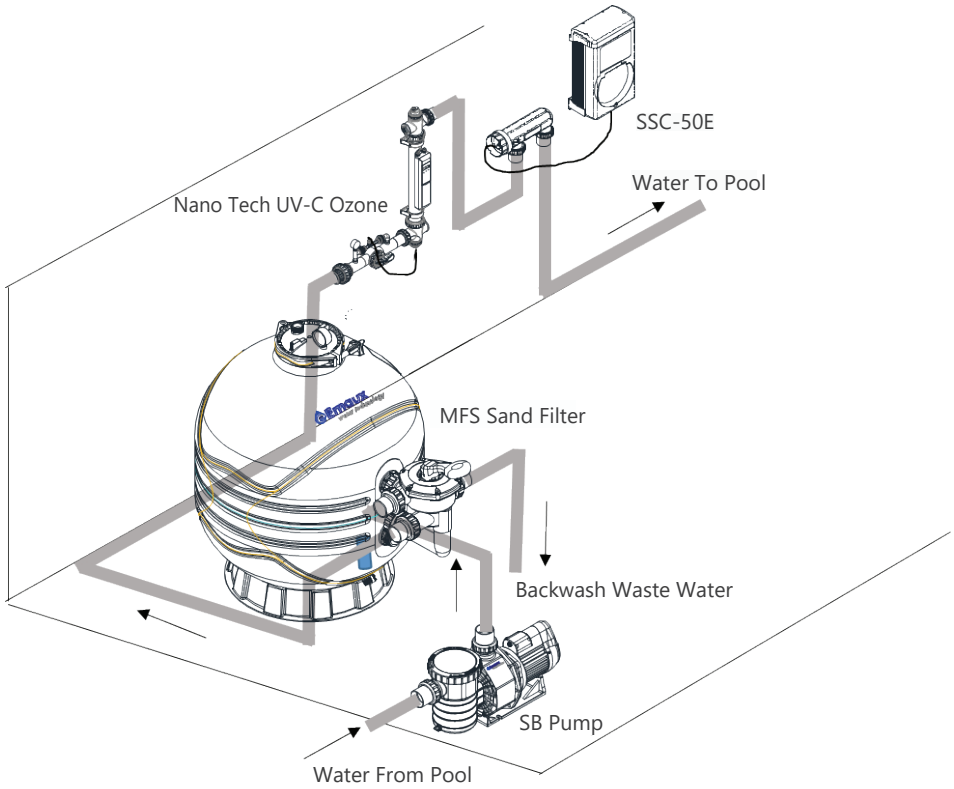

5.3 INSTALLATION OPTIONS

The dark blue transparent end cap and union set is inter changeable for all models, it can be place on either side. It is necessary to place and tighter the O-ring properly to prevent water leakage when doing relocation. There are two sets of 1.5" and 2" union which can be fit into imperial and metric pipe.

Transparent end cap with o-ring

Union with O-ring set

1.5" and 2" union

For NT-UV16, NT-UV40, NT-UV40-T, NT-UV75 and NT-UV75-T model Lamp unit, stainless steel lamp body can be installed in vertical or horizontal orientation.

WARNING: For NT-UV130F, NT-UV130-TF (130W UV-C Lamp), and NT-UV87-TO (O-zone) only vertical installation is allowed.

Mounting Options:
Instead on mounting on wall, there are two option of mounting on the ground.

1. Using the mounting base provided.

2. Using a wooden stand (not provided)

5.4 NT-UV130F and NT-UV130-TF with Flow Switch installation

The flow switch version's flow switch location is flexible to fit into the actual environment water flow direction. It can be placed from left side or right side, and top to bottom or bottom to top flow direction.

Right Side Top Down Bottom

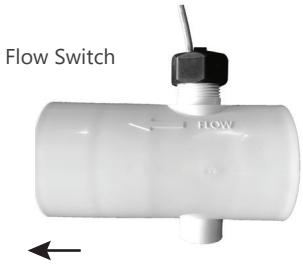

Left Side Bottom To Top

WARNING:

1. There is a flow direction arrow mark on the flow switch for following. Reverse the flow direction will not switch on the UV-C lamp.
2. The flow switch connection union can adopt both imperial and metric pipe.

5.5 NANO-TECH UV-C OZONE SYSTEM

WARNING:

To achieve the correct installation, please follow there commendations listed below:

1. Never install the UV-C system in an area exposed to direct sunlight. This equipment must be installed in a dry and ventilated area.
2. The UV-C system must be fitted in a vertical position, and leaving a minimum space of 30cm underneath and 1.5 meters at the top of the equipment for maintenance operations and replacing the lamp.
3. The UV-C system needs to be installed always after the filter and before pH regulator or any possible salt chlorinator or dosing system.
4. If the filtration pump exceeds the maximum flow rate allowed for the UV-C system, a by-pass circuit will be required.

VENTURI INSTALLATION GUIDE

Follow the instructions procedure below for installing the Nano-Tech UV Ozone System:

1. Fit the manometer (A) onto the Venturi circuit using Teflon tape. Hand-tighten the manometer.
2. Insert (B) into the outlet (C), make sure that the threaded nut (D) is as the following image displays :

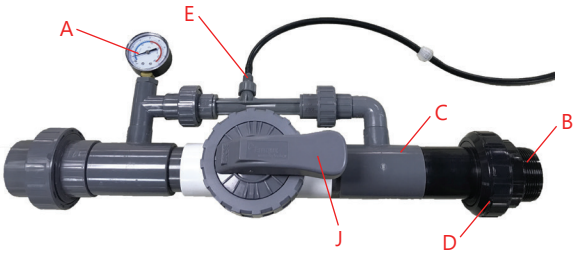

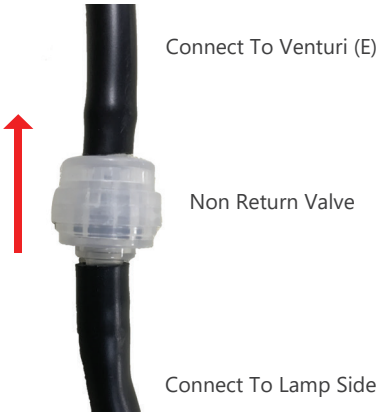

3. Screw the female hose fitting (E) onto the male thread of the Venturi circuit. The other end of the hose must be fitted into the elbow adapter, on the top of the system (F). There is a Non-Return valve (K) between (E) and (F) which is a one direction valve to prevent air go back to the UV lamp Ozone generator.
4. Reverse the Non Return Valve will not inject Ozone to the Venturi system and
5. Joint the 3 parts (B), (D) and (L), so that the Venturi circuit and the UV system are firmly assembled.
6. Afterwards, choose at suitable place to install the assembled system, if and when it follows the order accoring to Section 3 Typical Installation.
7. Fit the UV-C reactor with the supplied clips (H) and ensure that the 3-part couplings (B) (D) (L) are still solilytighten. Never use a wrench, clamps or other tools whatsoever to fix the reactor.
8. The power supply wire (I) has to be connected in a way that the UV system works as the same time as the filtrtion pump does. If not, all the UV system could get overheated.

9. Activate the pump, vent the whole system and check for any leakage in the circuit.
10. The quality of the Ozone air in the system can be adjusted by using the manual valve (J). The closer it remains, the more Ozone will enter the circuit. The desirable range on the manometer is 9~14 psi.
11. Keep in mind: the air filtering intake (G) on the upper part of the Ozone device is intended to absorb air for Ozone generation. It has to remain cleared. The venturi system also can be installed in vertical orientation but the UV-C Ozone lamp body cannot be installed in vertical orientation.

6. START UP

Before starting up the UV-C system, perform the following actions:

1. Back wash the filter and make sure it is completely clean.
2. Make sure the pool does not contain copper, iron nor algae.
3. Check and adjust the chemical parameters of your pool or spa. The proper chemical balance is essential for the correct UV-C system operation, and it also helps to reduce drastically the use of chemicals sanitizers.
   3.1 pH: 7.2 – 7.6
   3.2 Total alkalinity: 60 – 120ppm
   3.3 Hardness: less than 120mg/L
   3.4 Turbidity: less than 1NTU
   3.5 TSS (Total suspended solids): less than 10mg/L
   3.6 UV Transmittance: more than 75%.
4. Check the hydraulic connections and ensure there is no leakage.
5. Release the air from the circuit through the air relief valve in stalled on the filter (if equipped).
6. Power on the device and the UV-C lamp will light slowing and there is light come out from the transparent cover for power on sight.
7. For Ozone model, adjust the venture tube valve to have manometer reading 9~14 psi. Use the finger to cover air mesh to feel suction pressure is available.

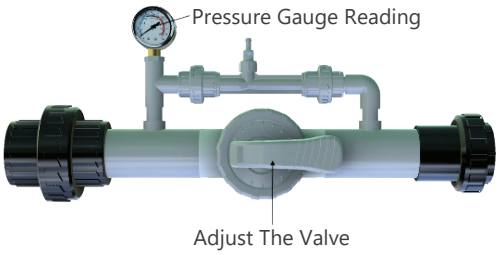

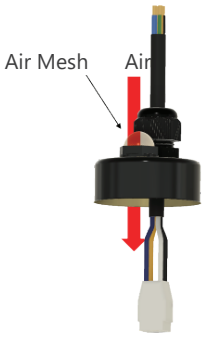

7. OPERATION

7.1 DIGITALTIMER*

*Available for the following models:
NT-UV40-T, NT-UV75-T, NT-UV130-TF, NT-UV87-TO.

The following three functions are available thanks to the digital timer (Figure 2):

1. UV lamp lifetime meter
2. Schedule timer
3. Clock

figure 2

7.2 UV LAMP LIFETIME METER

As soon as the above mentioned model with Timer is switched on, the program will carry out a self-test. The display will automatically show the following code: 8888 (display test); software version number; 50Hz or 60Hz indication of the mains frequency.

Following this, the display will show the meter reading:

1. For the models NT-UV40-T and NT-UV75-T: When the UV-C lamp is switched on for the first time, or after the 'Reset' function has been used, the value '9000' will appear on the display. A dot next to the digit on the far right of the display will blink every second: this indicates that the counter is running.
2. For the models NT-UV130-TF and NT-UV87-TO: When the UV-C lamp is switched on for the first time, or after the 'Reset' function has been used, the value '9000' will appear on the display. A dot next to the digit on the far right of the display will blink every second: this indicates that the counter is running. The real lifetime of these lamps is of 12000, but the display can only show 4 digits. You can adjust the number of hours manually once 3000 hours have passed (please find the instructions below).
3. If the UV-C system was used previously, once it is switched on again the display will indicate the last value before it was switched off. If you increased or reduced the value of the meter manually, the display will indicate the latest counter reading before it was switched off.

MANUAL ADJUSTMENT

1. Press the button 'MENU' and select the option 'Hr' by pressing 'MENU' again.
2. The flashing number shown on the screen will indicate the hours left for replacing the lamp.
3. Press the button 'MENU' to modify the hours.
   3.1 Use the buttons ▲ and ▼ to increase or decrease the counter value in steps of 500 hours from the initial value up to the maximum value of 9500 and the minimum of 500.
   3.2 Once to the desired hour is reached, stand off for 10 seconds until it stops flashing and confirm the set hour chosen.

The time meter will indicate in the following manner that the lamp must be replaced:

1. From hour position 0672, the display will blink every second. The lamp is to be replaced within 4 weeks.
2. From hour position 0336, the display will blink every half second. The lamp is to be replaced within 2 weeks.
3. From hour position 0168, the display will blink every 1⁄4 second. The lamp is to be replaced within 1 week.
4. At an hour position of 0000, the digits will blink continuously, and the meter will not continue to count down. The lamp must be replaced.

7.3 CLOCK SETTING

This function allows you to set the clock according to the current time.

1. Press the button 'MENU' and use the buttons ▲ or ▼ until you reach the option 'rest'. Press 'MENU' to select.
2. The hour indicator will flash. Press ▲ or ▼ to select the desired hour. Wait for 10 seconds until it stops flashing to confirm the hour.
3. Press 'MENU' to select the minutes, and minute indicator will flash. Press ▲ or ▼ to select the desired value. Wait for 10 seconds until it stops flashing to confirm the settings.

7.4 SCHEDULE TIMER SETTING

This function allows you to schedule the working hours desired for the proper disinfection of the pool. It must be set in every hour.

1. Press the button 'MENU' and use the buttons ▲ or ▼ until you reach the option 'UV'. Press 'MENU' to select.
2. 'UV00' means midnight 00:00h; Press ▲ or ▼ to change the time from 0h to 24h. 'UV01' means 01:00am; 'UV02' means 02:00am, etc.
3. Press the button 'MENU' to select the hour.
4. The selected hour will be flashing. Press ▲ or ▼ to select if at this hour the device will be switchedon roff. Wait for 10 seconds until its tops flashing and confirm the selection.
5. Press the button 'MENU' if you want to go back or select another hour.

Check Timer Setting

6. If the working hours has been set, follow the steps to check schedule status.
7. For example, press 'MENU' and press ▲ or ▼ until option 'UV' display,
8. Press 'MENU' and press ▼ to select 'UV05',
9. Press 'MENU' and display flashing 'OFF', it means switched off at this hour. If 'ON' is flashing, it mean "ON" at this hour.
10. Press 'MENU' again and repeat the same procedure to check other hours.

7.5 FLOW SWITCH*

*Available for the following models: NT-UV130-F, NT-UV130-TF.

These models are supplied with Amalgam UV lamp recognized as the strongest in the UV-C market. Consequently, it is very important that the lamp works always with a minimum flow rate. For that reason, the flow switch installed in the chamber will automatically switch the device off if no water is flowing through it.

8. MAINTENANCE

To ensure the correct operation and a long life of this UV-C system, regularly check the chemical parameters and maintain them within the recommended range:

1. pH: 7.2 –7.6
2. Total alkalinity: 60 – 120ppm
3. Hardness: less than 120mg/l
4. Turbidity: less than 1NTU
5. TSS (Total suspended solids): less than 10mg/l
6. UV Transmittance: more than75%.
7. For NT-UV87-OT O-zone model, clean the air mesh to allow enough air flow into the system to generate O-zone.
8. For NT-UV130F or NT-UV130-TF check the flow switch is function by power off the pump to stop water flow circulation. Check the UV-C is off from the transparent cover.

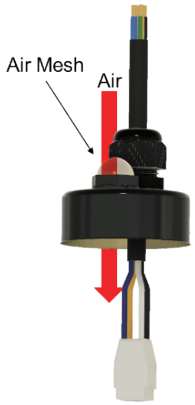

9. LAMP AND QUARTZ GLASS MAINTENANCE AND REPLACEMENT

The device must be cleaned twice a year. If there is an increase in algae and / or scale, the quartz glass tube in which the lamp is positioned must be cleaned using a soft cloth with spirit vinegar or acid.
The UV-C lamps must be replaced once they lifetime comes to the end. Please refer to the following table:

Model	Lamp Lifetime (Operating Hours)
NT-UV16	9000 hrs
NT-UV40	
NT-UV40-T	
NT-UV75	
NT-UV75-T	
NT-UV87-TO	12000 hrs
NT-UV130-F	12000 hrs
NT-UV130-TF	

Always switch off the power supply when replacing the lamp. If necessary, consult the spare parts drawing during replacement, maintenance or dismantling.
The procedure for replacing the lamp is as follows:

1. Stop the circulation pump so that no water is flowing into the unit.
2. Allow the ultraviolet lamp to cool for at least 30 minutes before handling.
3. Untighten the external union nuts, and drain the water from the device.
4. Unthread the top union nut with the cable and carefully remove the lid with the cable gland from the housing.
5. Helped by the own cable, remove the lamp from the UV-C system through the central hole in the quartz glass holder. As these parts are very fragile, caution is essential. Do not touch the lamp with bare hands; use a soft cloth or cotton gloves to handle the lamp. If the lamp has been touched, it is recommended to clean it again using a soft cloth and some alcohol.
6. If the quartz glass needs cleaning or replacing, unthread the quartz glass holder and carefully remove the quartz glass with the sealing ring. Use a soft cloth or cotton gloves to handle the quartz glass. If it has been touched, it is recommended to clean it again using a soft cloth.
7. Introduce the cleaned or a new quartz glass. Ensure that it is introduced exactly in the initial position. Do not forget the sealing ring on the top of the quartz glass.
8. Hand-tighten again the quartz glass holder and introduce the new lamp carefully into the quartz glass through the same hole in the quartz glass holder.
9. Install the cable gland for water proofing to the lamp cable and thread the external union nuts.

10. STAINLESS STEEL HOUSING MAINTENANCE

The stainless steel interior can be cleaned with a soft brush. First of all, the UV-C and quartz lamps have to be removed following the below steps:

1. Unthread the adaptor male - male 2 ½"– 2". Remove the sight glass from the opposite side of the adaptor. There are two more threaded adaptors inside the connections. These adaptors make the stainless steel housing holes to be aligned with the connections and sight glass. These two adaptors are placed in the thread of the connection and in the thread of the sight glass.
2. Unthread the main union nut from the stainless steel housing, and remove the pressuring connector from inside the nut.
3. Remove the PVC tee connections from the stainless steel housing using a plastic hammer.
4. Remove the sealing ring from the stainless steel housing.
5. Clean stainless steel housing and then assemble the UV-C system again:
   5.1 Introduce the sealing ring on the stainless steel housing.
   5.2 Assemble the PVC tee connections taking into consideration that the connections must coincide with the holes of the stainless steel housing.
   5.3 Assemble again the pressuring connector and all the union nuts properly. Note that the adaptors that keep the position of the connections aligned with the stainless steel housing have to be threaded in a specific position so that the two holes can be used for an unscrew to help you to thread the adaptor.

11. ELECTRICAL UNIT REPLACEMENT

If the electrical unit needs to be replaced, first of all the earth connection must be disconnected from the electrical housing. The entire ballast box must be unscrewed and the earth wiring must be disconnected from the device.
Unscrew the screw of the ballast box and carefully disconnect the lamp holder from the lamp.
All these parts must be carefully kept, as they are not supplied with the new housing or electrical unit.

11.1 ELECTRICAL WIRING

WARNING: The unit has power cord with plug attached on the plug, plug it to a power socket with a Residual Current Device (RCD) or Ground Fault Circuit Interrupt (GFCI) having a rated residual operating current not exceeding 30mA.

WARNING: If the RCD / GFCI device trips, it means there is fault on the power line grounding. Do not use this unit. Disconnect the power and have the problem corrected by a qualified service representative before using. Press the reset button to reset the RDC / GFCI devices after fixed. It will keeps the circuit shut off and will not reset if the power line problem is not fixed. It is recommend to test the RCD / GFCI at least once a month.

RCD

NEMA GFCI Receptacle

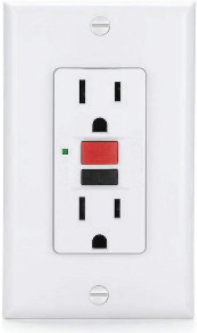

Australia Plug UK Plug European Plug 200-240Vac Single Phase	NEMA Plug 115Vac Single Phase	NEMA 230Vac 3 phase Wire Color Code
L N Ground Green / Yellow or Green	L Black N White or Silver Green / Yellow or Green	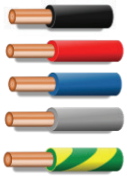 L1 = Black L2 = Red L3 = Blue White Green / Yellow or Green

11.2 CONTROLLER PCB

The power cord Live connect to L and Neutral to N of the PCB upper terminals. The power output of the PCB has the same Live and Neutral color wire to the UV-C lamp ballast.

Don't unwired the lower 2 position terminal white color wire. It is for with flow switch version connection to stop the lamp when there is no water inside the piping to prevent UV-C lamp over heat without water cooling.

There is a CR2032 button size battery for timer setup memory.

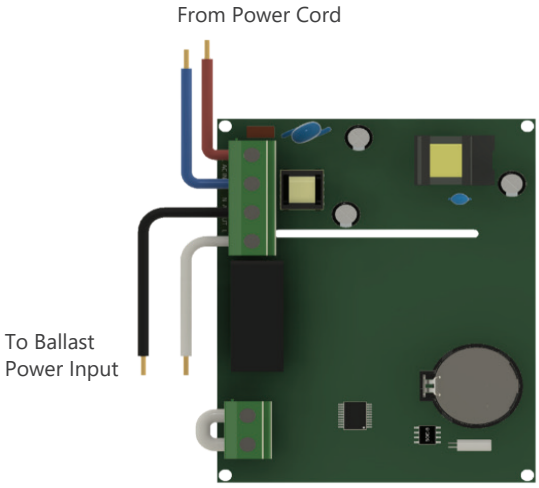

NT-UV130TF Timer version, remove the white color jumper and connect the flow switch red and black cable.

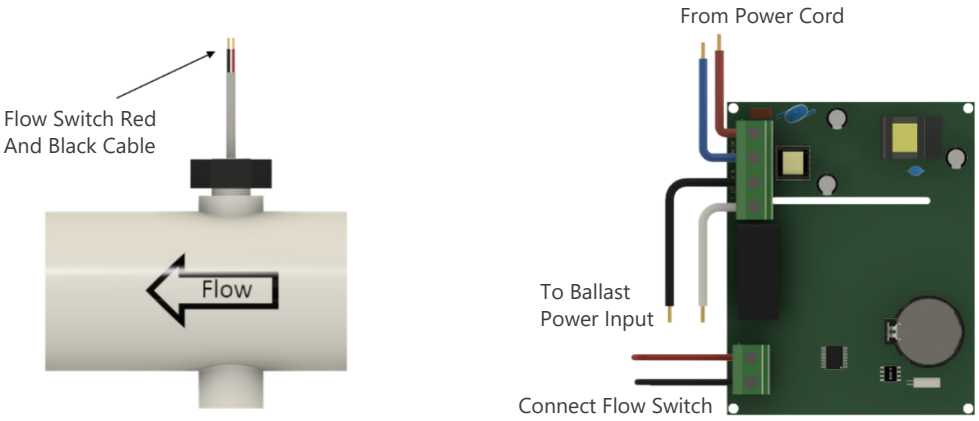

NT-UV130F without Timer version, there is flow switch controller PCB

11.3 BALLAST CONNECTION

The Output L and N of the controller PCB connect to the power input of the ballast according to the pin definition Live, Neutral and Ground. The other side ballast output has four pins for UV-C lamp connection.

L,N from Control PCB Side
NT-UV40
NT-UV40-T
NT-UV75
NT-UV75-T

Ballast Wiring Type

UV-C Lamp Side

NT-UV130F
NT-UV130-TF

NT-UV87-TO

Yellow color output connect T5 lamp socket blue and brown wire with crimp

Red color output connect T5 lamp socket black and yellow green wires with crimp

11.4 GROUNDING

There is a ground crimp with three yellow / green wire, one is from the power cord (earth), one is to the ballast ground terminal and one connect to the stainless steel housing outside the ballast plastic housing.

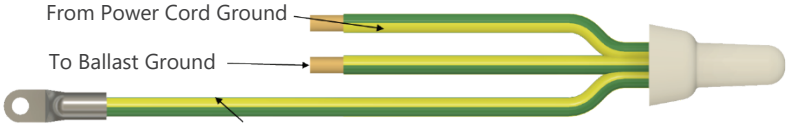

Loss of any grounding will trigger the RCD or GFCI and stop the power when power on. It is use to protect from personnel electric socket.

11.5 LAMP SOCKET

WARNING:

It is a T5 type lamp socket and be careful to plug the lamp in right orientation to prevent the lamp's connect pins broken. Don't force the lamp pin into the lamp socket. Ensure the lamp and socket is well connected to prevent the lamp loose and damage before insert to the stainless steel body.

For NT-UV87-OT O-zone model, the UV-C lamp is designed dedicate. Replacement of any other band name model has to been consulted your dealer for confirmation. It will affect the ballast and O-zone generation quantity.

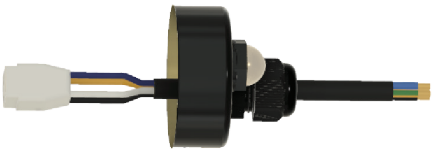

UV-C Lamp Socket Assemble

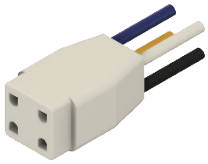

T5 Socket Cable Wiring Color Scheme

3 Pins UV-C Lamp

12. TROUBLE SHOOTING

Trouble	Possible Solution
UV-C system failure, possible lamp disconnection	Disconnect the power cord from the electrical outlet, disassemble the lamp and verify if the lamp connector is fixed firmly in place.
	Verify if the electric cable is connected into an electrified circuit. Test the electrical circuit.
	Make sure you have not connected the device into any power source other than specified on the unit's label. If you have done so in error, the electrical unit might have been damaged and should be replaced. Contact your supplier for the replacement (Not warranted).
The UV lamp no longer lit	Verify that the electrical outlet where the UV-C System is plugged into has the proper voltage and the cable is securely plugged into the outlet.
	The lamp has burned out. Replace the UV lamp.
	The electrical unit has burned out. Contact your supplier for the replacement.
	Check the timer setting. It can be at “OFF” schedule.
Pool water is green	Check the chemical balance of the pool.
	Check the UV-C system to make sure it is on.
	Run the UV-C system and the circulation pump longer. If the UV system is operated by a timer, increase a number of working hours.
	Consider replacing the UV lamp. After the lamp reaches its lifespan, the lamp efficiency drops up to 80%. This is normal for all low- pressure type UV lamps. Note: NT-UV87-TO lamp lifetime 12000 hrs, NT-UV130-F/TF lamp lifetime 12000 hrs, other lamp lifetime 9000 hrs
UV-C system makes noise when operating	Check all connections and sealing rings, especially those near to the UV lamp and the quartz glass.
	Check the screws on the installation, and pay attention to those vibration points
Water is coming out; the UV-C system is leaking	Check all connections and sealing rings, make sure that all connections are threaded properly.
	Check the quartz glass if it is broken or damaged.

13. SPARE PART LIST

NT-UV16

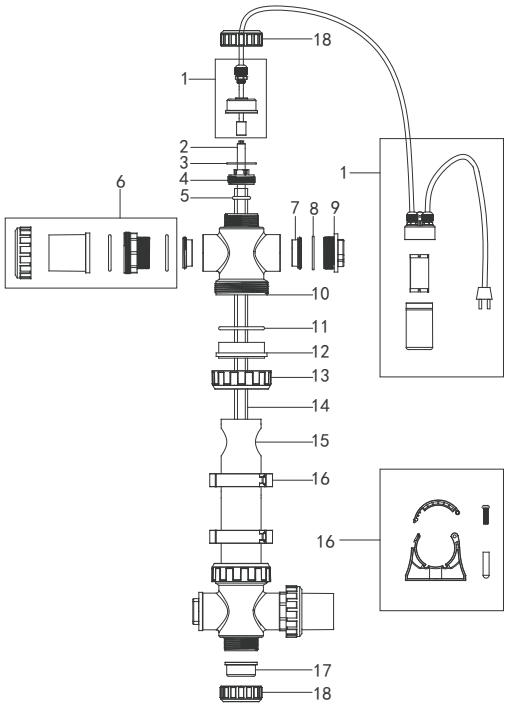

Key No.	Part No.	Description	QTY
1	E130405	UV16 Ballast and lamp connection	1
2	E130425	16W UV lamp	1
3	111040015	Lamp connector O' ring	2
4	440422251	25 Lamp adaptor	2
5	111030021	Quartz O' ring (d24.8 x ϕ5.2)	2
6	E190201	Pipe connection 2''	2
7	620125430	Adaptor	4
8	111142482	UV body O' ring	2
9	430221017	Transparent lid	2
10	620061857	25 Cross	2
11	111202472	Quartz O' ring (D76 x ϕ6)	2
12	1304565458	Body connection	2
13	430170986	Union nut	2
14	103025322	16W Quartz tube D25 x 485mm	1
15	107175310	Stainless steel body	1
16	E130404	Closed pipe clips	2
17	620135460	Cap	1
18	430170635	Union nut 1.5''	1

NT-UV40 & NT-UV75

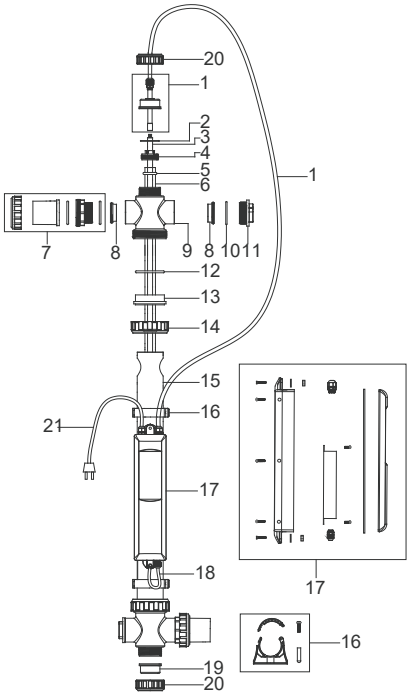

Key No.	Part No.	Description	QTY
1	E130423	End Cap for Cable Hole With Epoxy	1
2	111040015	Lamp connector O'ring	2
3	E130426	40W UV lamp	1
	E130427	75W UV lamp	1
4	440422251	25 Lamp adaptor	2
5	111030021	Quartz O'ring (d24.8 x ϕ5.2)	2
6	103025325	40W/75W Quartz tube D25 x 915mm	1
7	E190201	Pipe connection 2"	2
8	620125430	Adaptor	4
9	620061857	25Cross	2
10	111142482	Connector O'ring	2
11	430221017	Transparent lid	2
12	111202472	UV body O'ring (D76 x ϕ6)	2
13	1304565458	Body connection	2
14	430170986	Union Nut	2
15	620145462	Stainless steel body	1
16	E130404	Closed pipe clips	2
17	E130408	UV40 ballast	1
	E130409	UV75 ballast	1
18	E130407	Earth Connection	1
19	620135460	Cap	1
20	430170635	Union Nut 1.5"	1
21	105021259	Plug lead	1

NT-UV40T & NT-UV75T

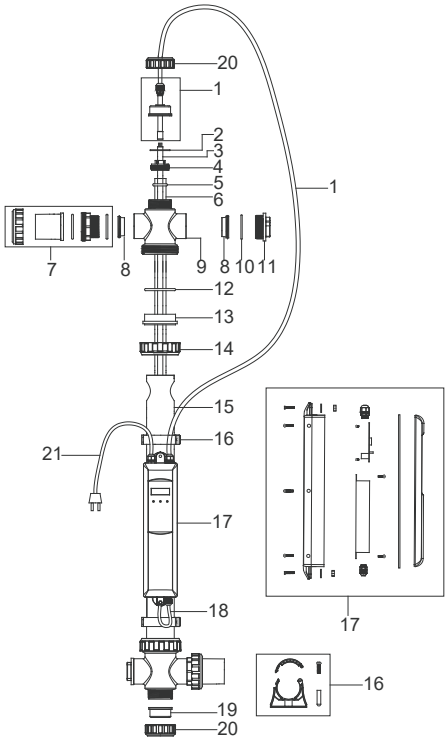

Key No.	Part No.	Description	QTY
1	E130423	End cap for cable hole with epoxy	1
2	111040015	Lamp connector O'ring	2
3	E130426	40W UV lamp	1
	E130427	75W UV lamp	1
4	440422251	25 Lamp adaptor	2
5	111030021	Quartz O'ring (d24.8 x ϕ5.2)	2
6	103025325	40W / 75W Quartz tube D25 x 915mm	1
7	E190201	Pipe connection 2''	2
8	620125430	Adaptor	4
9	620061857	25 Cross	2
10	111142482	Connector O'ring	2
11	430221017	Transparent lid	2
12	111202472	UV body O'ring (D76 x ϕ6)	2
13	1304565458	Body connection	2
14	430170986	Union nut	2
15	620145462	Stainless steel body	1
16	E130404	Closed pipe clips	2
17	E130410	UV40T ballast	1
	E130411	UV75T ballast	1
18	E130407	Earth connection	1
19	620135460	Cap	1
20	430170635	Union nut 1.5''	1
21	105021259	Plug lead	1

NT-UV87-TO

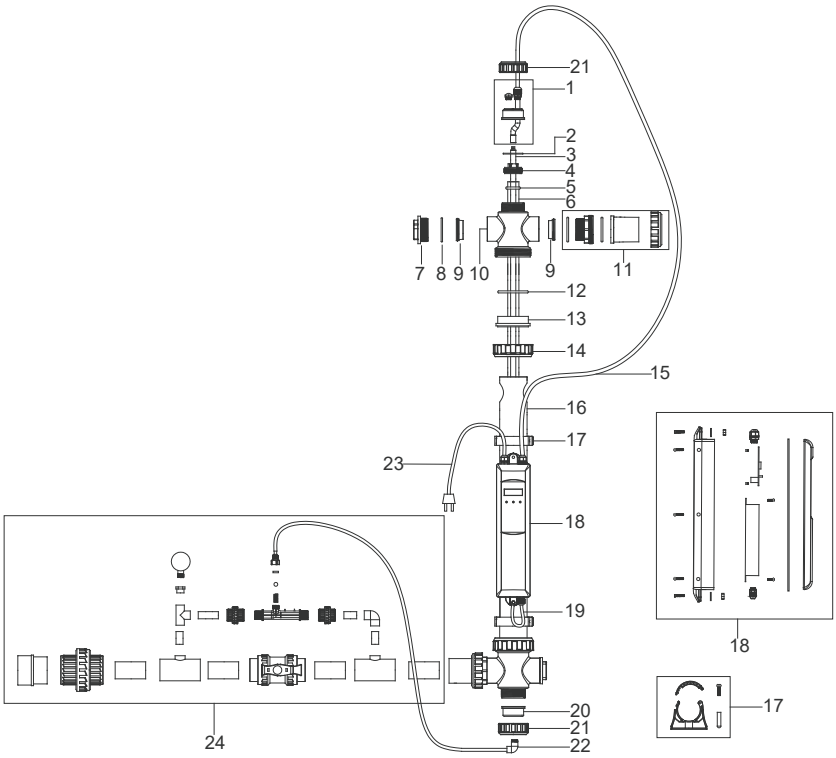

Key No.	Part No.	Description	QTY
1	E130424	End cap for double hole with epoxy	1
2	111040015	Lamp connector O'ring	2
3	E130428	87W UV lamp	1
4	440422251	25 Lamp adaptor	2
5	111030021	Quartz O'ring (d24.8 x ϕ5.2)	2
6	103025489	87W Quartz tube D25 x 910mm	1
7	430221017	Transparent lid	2
8	111142482	Connector O'ring	2
9	620125430	Adaptor	4
10	620061857	25 Cross	2
11	E190201	Pipe connection 2''	2
12	111202472	UV body O'ring (D76 x ϕ6)	2
13	1304565458	Body connection	2
14	430170986	Union nut	2
15	105004779	Cable	1
16	620145462	Stainless steel body	1
17	E130404	Closed pipe clips	2
18	E130402	UV87-TO ballast	1
19	E130407	Earth connection	1
20	620135467	Air hole cap	1
21	430170635	Union nut 1.5''	1
22	108275466	Gas nozzle	1
23	105021259	Plug lead	1
24	E130403	Oxidation set	1

NT-UV130-F & NT-UV130-TF

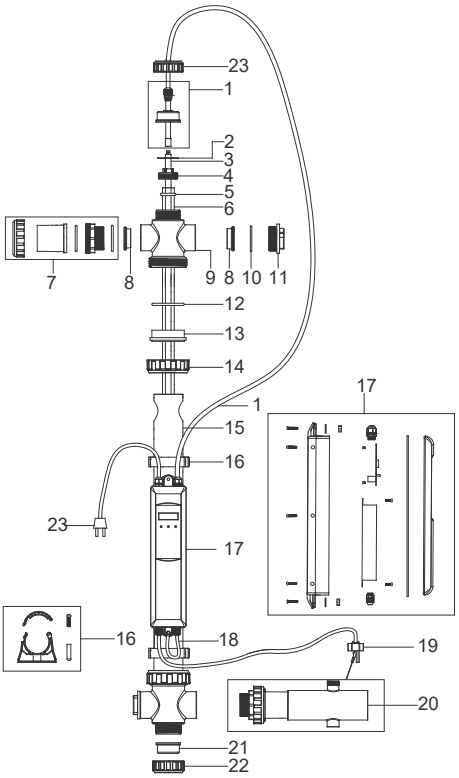

Key No.	Part No.	Description	QTY
1	E130423	End cap for cable hole with epoxy	1
2	111040015	Lamp connector O'ring	2
3	E130429	130W UV lamp	1
4	440420156	31 Lamp adaptor	2
5	111030020	Quartz O'ring (d30 x ϕ6)	2
6	103025330	130W Quartz tube D31x 915mm	1
7	E190201	Pipe connection 2''	2
8	620125430	Adaptor	4
9	6200060156	31 Cross	2
10	111142482	Connector O'ring	2
11	430221017	Transparent lid	2
12	111142482	UV body O'ring (D76 x ϕ6)	2
13	1304565458	Body connection	2
14	430170986	Union nut	2
15	620145462	Stainless steel body	1
16	E130404	Closed pipe clips	1
17	E130413	UV130-F ballast	1
17	E130412	UV130-TF ballast	1
18	E130407	Earth connection	1
19	114145332	Flow switch	1
20	E130434	Flow switch union kit	1
21	620135460	Cap	1
22	430170635	Union nut 1.5''	1
23	105021259	Plug lead	1

14. TERMS OF THE WARRANTY

As original purchaser of this equipment have purchased from Emaux Water Technology Co Ltd, through Authorized International Distributor or Dealer, warrants its products free from defects in materials and workmanship under normal use during warranty period. The warranty period begins on the day of purchase and extends only to the original purchaser. It is not transferable to anyone who subsequently purchases the product from you. It excludes all expendable parts.
During the warranty period, Emaux authorized reseller will repair or replace defective parts with new parts or, at the option of Emaux, serviceable used parts that are equivalent or superior to new parts in performance.

This Limited Warranty extends only to products purchased from Emaux authorized reseller. This Limited Warranty does not extend to any product that has been damaged or rendered defective (a) as a result of accident, misuse or abuse;
(b) as a result of an act of God;
(c) by operation outside the usage parameters stated herein;
(d) by the use of parts not manufactured or sold by Emaux;
(e) by modification of the product;
(f) as a result of war or terrorist attack; or
(g) as a result of service by anyone other than Emaux authorized reseller or authorized agent.

EXCEPT AS EXPRESSLY SET FORTH IN THIS WARRANTY, EMAUX MAKES NO OTHER WARRANTIES EXPRESSED OR IMPLIED, INCLUDING ANY IMPLIED WARRANTIES OR MERCHANTABILITY AND FITNESS FOR A PARTICULAR PURPOSE. EMAUX EXPRESSLY DISCLAIMS ALL WARRANTIES NOT STATED IN THIS LIMITED WARRANTY. ANY IMPLIED WARRANTIES THAT MAY BE IMPOSED BY LAW ARE LIMITED TO THE TERMS OF THIS EXPRESS LIMITED WARRANTY.

	Correct disposal of this product
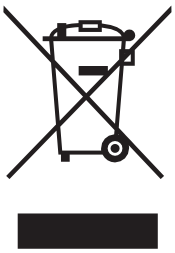	This symbol on the product, or in its packaging, indicates that this product may not be treated as household waste. Instead, it should be taken to the appropriate waste collection point for the recycling of electrical and electronic equipment. By ensuring this product is disposed of correctly, you will help prevent potential negative consequences for the environment and human health, which could otherwise be caused by the inappropriate waste handling of this product. For more detailed information about the recycling of this product, please contact your local council, your household waste disposal service, or the shop where you purchased the product.

EMAUX WATER TECHNOLOGY CO., LTD

ADDRESS FLAT A-D, 20/F., KAI BO 22, 22 WING KIN ROAD,
KWAI CHUNG, HONG KONG
PHONE +852 2832 9880

YOUR PREMIER SUPPLIER

www.emauxgroup.com